Cambridge International AS & A Level

Cambridge International Examinations
Cambridge International Advanced Subsidiary and Advanced Level

CANDIDATE NAME									
CENTRE NUMBER						CANDIDATE NUMBER			

1309660604

PHYSICS **9702/52**

Paper 5 Planning, Analysis and Evaluation **May/June 2016**

1 hour 15 minutes

Candidates answer on the Question Paper.

No Additional Materials are required.

READ THESE INSTRUCTIONS FIRST

Write your Centre number, candidate number and name on all the work you hand in.
Write in dark blue or black pen.
You may use an HB pencil for any diagrams or graphs.
Do not use staples, paper clips, glue or correction fluid.
DO **NOT** WRITE IN ANY BARCODES.

Answer **all** questions.

Electronic calculators may be used.
You may lose marks if you do not show your working or if you do not use appropriate units.

At the end of the examination, fasten all your work securely together.
The number of marks is given in brackets [ ] at the end of each question or part question.

This document consists of **8** printed pages.

© UCLES 2016

CAMBRIDGE International Examinations

1 A student is investigating the acceleration of a trolley moving up an inclined plane as shown in Fig. 1.1.

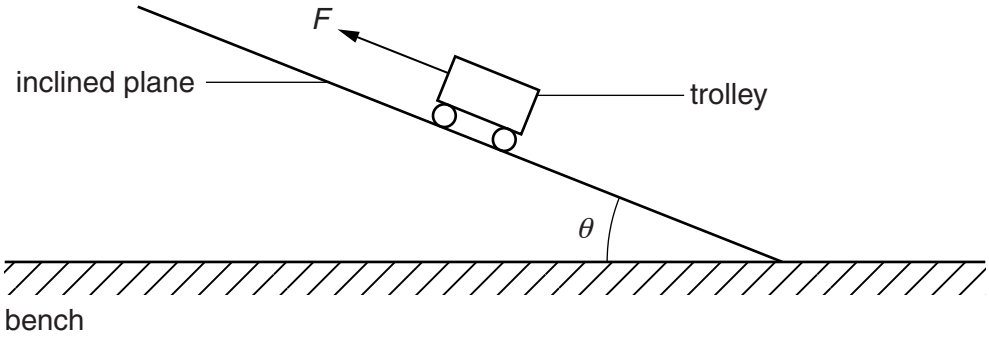

Fig. 1.1

The student is investigating the relationship between the acceleration a of the trolley and the angle θ of the inclined plane when a force F is applied to the trolley.

It is suggested that the relationship is

$$ma = F - (mg \sin\theta + k)$$

where g is the acceleration of free fall, m is the mass of the trolley and k is a constant.

Design a laboratory experiment to test the relationship between a and θ. Explain how your results could be used to determine a value for k. You should draw a diagram, on page 3, showing the arrangement of your equipment. In your account you should pay particular attention to

- the procedure to be followed,
- the measurements to be taken,
- the control of variables,
- the analysis of the data,
- any safety precautions to be taken.

[15]

© UCLES 2016

Diagram

.....

.....

.....

.....

.....

.....

.....

.....

.....

.....

.....

.....

.....

.....

.....

.....

.....

.....

.....

.....

.....

.....

.....

.....

.....

.....

.....

[Total: 15]

2 A student is investigating how the resistance of a wire depends on the diameter of the wire.

The circuit is set up as shown in Fig. 2.1.

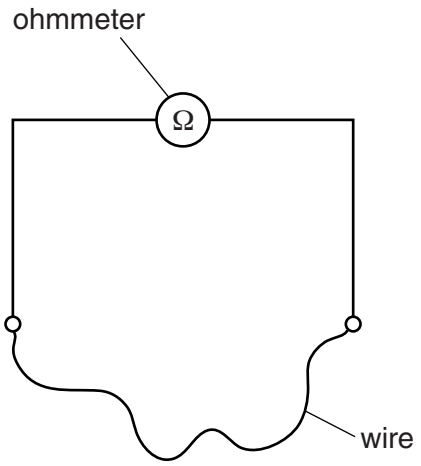

Fig. 2.1

The resistance R of the wire is measured using an ohmmeter.

The experiment is repeated for wires of the same material and same length L but different diameter d.

It is suggested that R and d are related by the equation

$$R = \frac{4\rho L}{\pi d^2}$$

where ρ is a constant.

(a) A graph is plotted of R on the y-axis against $\frac{1}{d^2}$ on the x-axis.

Determine an expression for the gradient.

gradient = ...[1]

(b) Values of d and R are given in Fig. 2.2.

$d/10^{-3}\,\text{m}$	R/Ω	
0.91 ± 0.01	1.6	
0.56 ± 0.01	4.4	
0.46 ± 0.01	6.6	
0.38 ± 0.01	9.7	
0.32 ± 0.01	13.9	
0.27 ± 0.01	19.5	

Fig. 2.2

Calculate and record values of $\frac{1}{d^2}/10^6\,\text{m}^{-2}$ in Fig. 2.2.

Include the absolute uncertainties in $\frac{1}{d^2}$. [3]

(c) (i) Plot a graph of R/Ω against $\frac{1}{d^2}/10^6\,\text{m}^{-2}$.

Include error bars for $\frac{1}{d^2}$. [2]

(ii) Draw the straight line of best fit and a worst acceptable straight line on your graph. Both lines should be clearly labelled. [2]

(iii) Determine the gradient of the line of best fit. Include the absolute uncertainty in your answer.

gradient = ...[2]

© UCLES 2016

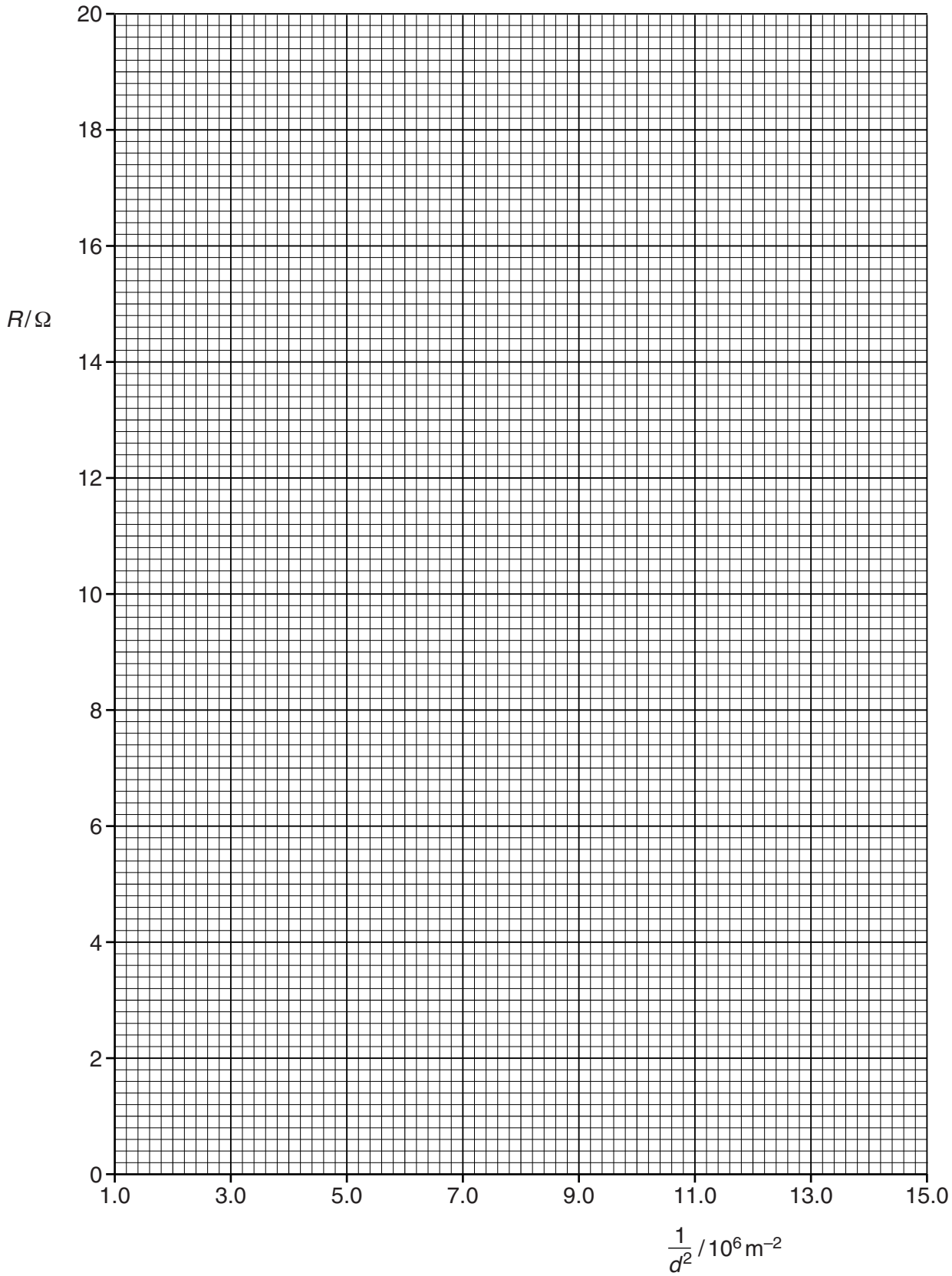
20
18
16
R / Ω
14
12
10
8
6
4
2
0
1.0
3.0
5.0
7.0
9.0
11.0
13.0
15.0
1/d² / 10⁶ m⁻²

(d) (i) Using your answers to **(a)** and **(c)(iii)**, determine the value of ρ. Include an appropriate unit.

Data: $L = 1.00 \pm 0.01$ m.

$\rho =$ .....[2]

(ii) Determine the percentage uncertainty in ρ.

percentage uncertainty in $\rho =$ ..... % [1]

(e) The experiment is repeated with a thinner wire of diameter 0.23 ± 0.01 mm. The wire is of the same material and length.

Determine the resistance R of the wire. Include the absolute uncertainty in your answer.

$R =$ ..... Ω [2]

[Total: 15]

To avoid the issue of disclosure of answer-related information to candidates, all copyright acknowledgements are reproduced online in the Cambridge International Examinations Copyright Acknowledgements Booklet. This is produced for each series of examinations and is freely available to download at www.cie.org.uk after the live examination series.

© UCLES 2016